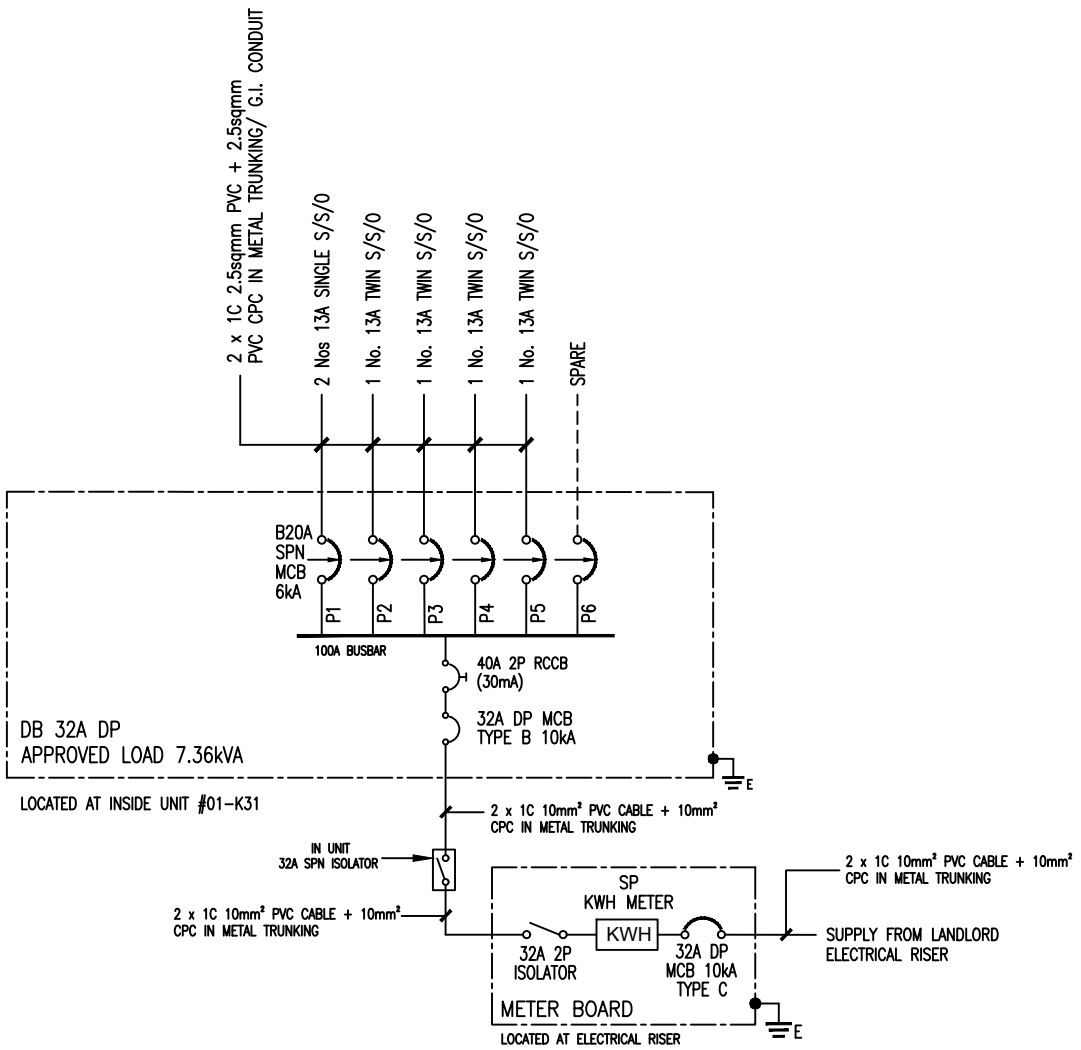

EMA LICENCED ELECTRICAL WORKER
TECHNICIAN
NYAP JUNN YEAN
8/33613
SINGAPORE

CLIENT / ADDRESS :	MAIN CONTRACTOR :	ELECTRICAL CONTRACTOR :	DRAWING TITLE :	LEW :	CHECKED :	DATE :
INVESSO PTE LTD 80 MARINE PARADE ROAD #01-K31 PARKWAY PARADE SINGAPORE 449269		I2R M&E PTE LTD 709 YISHUN AVE 5 #01-K1 SINGAPORE 760709 HP: 9777 1983	SINGLE LINE DIAGRAM (SLD)	NYAP JUNN YEAN EMA Licence No. : 8/33613	RYAN	21 OCT 2025
					DRAWING NO. : I2R-IVS-PWP-SLD	REV : 0